BDC 4 ... 18 GHz
Directional Coupler

BONN Elektronik
YOUR ULTIMATE RF POWER SOURCE

STANDARD MODELS

Model	Frequency Range X)	Coupling X) dB	Power Pmin W	Insertion Loss max dB	Directivity min dB	VSWR max Main Line	Main Line Connector 1), 2)	Coupling Line Connector 3)
BDC 4018-30/30S	4 ... 18 GHz	30 ±2.5	30	1	10	1.6:1	SMA-f	SMA-f

S: Single directional coupler

OPTIONS

1) male RF input connector
2) alternative main line connectors

X) custom frequency range and custom coupling attenuation upon request
*) WRD 650: below 6.2 GHz, VSWR and directivity deteriorate

Notice:
Under normal operating conditions all Directional Couplers do not need to be mounted to a heatsink. However, if the units permanently run into high mismatch conditions at full rated power, the circuits will heat up significantly. In this case, we would recommend the units be mounted to a suitable heatsink or metal surface, capable to maintain a baseplate temperature of +60°C max.

Dieses Dokument ist Eigentum der Firma Bonn Elektronik GmbH.
Vervielfältigung und Veröffentlichung ohne ausdrückliche Genehmigung ist untersagt. Änderungen im Sinne des technischen Fortschritts können ohne Vorankündigungen vorgenommen werden. Wenn nichts anders angegeben alle Maße Millimeter.

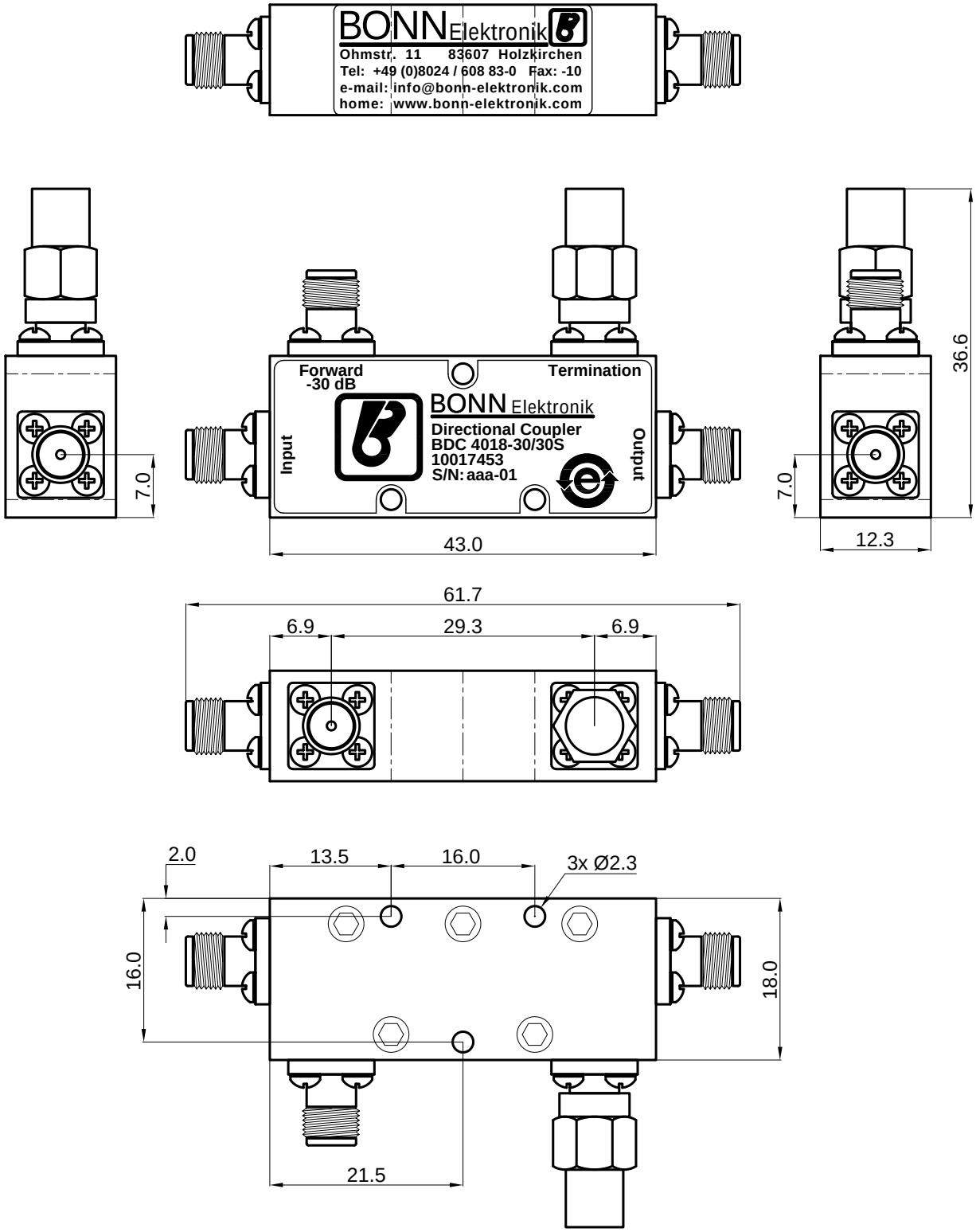

Product Information		Entwurf 18.09.18 Bonn
10017453		
Directional Coupler		Zeichnung 18.09.18 Bhu
BDC 4018-30/30S		Prüfung
BONN Elektronik info@bonn-elektronik.com • www.bonn-elektronik.com	1-1	Freigabe 18.09.18 Bonn

ISO - Projection

Schutzvermerk nach DIN ISO 16016 beachten Observe copyright indication DIN ISO 16016

This document is the property of Bonn Elektronik GmbH.
Reproduction and release without express permission is strictly prohibited.
We reserve the right to introduce modifications without prior notification, where they serve technical progress. Unless otherwise indicated all dimensions millimeters.